PM10S

PARVALUX®

MOTOR	Permanent magnet DC motor
PROTECTION	Totally enclosed (IP54)
GEARBOX	Worm and wheel (S)
MOTOR POWER	23 - 100 Watts
SPEED	21 - 970 rpm
VOLTAGE	12V - 220V DC available range
WEIGHT	1.50 kg
RADIAL LOAD	69 N
AXIAL LOAD	35 N
SHAFT TYPE	Single ended or double ended upon request
EXTRAS	See page 36

See page 158 to specify shaft and gearbox position
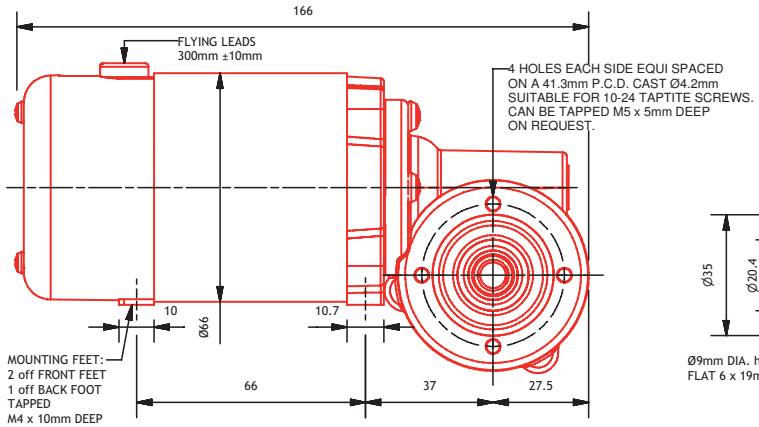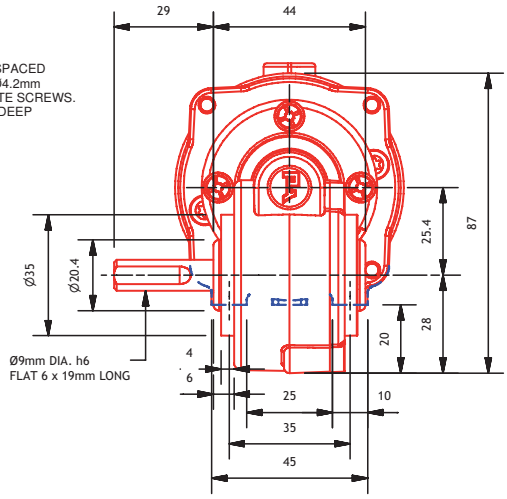
Motor Power Cont (W)	23	30	45	60	TORQUE (Nm)					
Motor Power 1 Hour (W)	28	38	55	75						
Motor Power 15 Min (W)	35	50	70	100						
RATIO	MOTOR SPEED (rpm)				CONTINUOUS		1 HOUR		15 MINUTE	
	1500	2000	3000	4000	Composite	Bronze	Composite	Bronze	Composite	Bronze
	OUTPUT SPEED (rpm)									
70	21	29	43	57	1.5	2.5	1.5	2.5	1.5	2.5
66	23	30	45	61	1.5	2.5	1.5	2.5	1.5	2.5
60	25	33	50	67	2.3	3.1	2.3	3.8	2.3	4.0
54	28	37	56	74	2.3	3.0	2.3	3.6	2.3	4.0
48	31	42	63	83	2.3	2.8	2.3	3.4	2.3	4.0
40	38	50	75	100	2.5	2.5	2.9	3.1	2.9	3.9
36	42	56	83	111	2.3	2.3	2.9	2.9	2.9	3.7
33	45	61	91	121	2.2	2.2	2.7	2.7	2.9	3.5
30	50	67	100	133	2.1	2.1	2.6	2.6	2.9	3.3
27	56	74	111	148	2.0	2.0	2.4	2.4	2.9	3.1
25	60	80	120	160	1.9	1.9	2.3	2.3	2.9	2.9
22 1/2	67	89	133	178	1.7	1.7	2.1	2.1	2.7	2.7
20 1/2	73	98	146	195	1.6	1.6	2.0	2.0	2.5	2.5
18 1/2	81	108	162	216	1.5	1.5	1.9	1.9	2.4	2.4
16 1/2	91	121	182	242	1.4	1.4	1.7	1.7	2.2	2.2
15 1/2	97	129	194	258	1.3	1.3	1.6	1.6	2.1	2.1
14 1/2	103	138	207	276	1.3	1.3	1.6	1.6	2.0	2.0
13 1/2	111	148	222	296	1.2	1.2	1.5	1.5	1.9	1.9
12 1/2	120	160	240	320	1.2	1.2	1.4	1.4	1.8	1.8
11 1/3	132	176	265	353	1.1	1.1	1.3	1.3	1.7	1.7
10 1/3	145	194	290	387	1.0	1.0	1.2	1.2	1.6	1.6
9 1/3	161	214	321	429	0.9	0.9	1.1	1.1	1.5	1.5
8 1/3	180	240	360	480	0.9	0.9	1.0	1.0	1.3	1.3
7 1/4	207	276	414	552	0.8	0.8	0.9	0.9	1.2	1.2
6 1/4	240	320	480	640	0.7	0.7	0.8	0.8	1.1	1.1
5 1/6	290	387	581	774	0.6	0.6	0.7	0.7	0.9	0.9
4 1/8	364	485	727	970	0.5	0.5	0.6	0.6	0.8	0.8